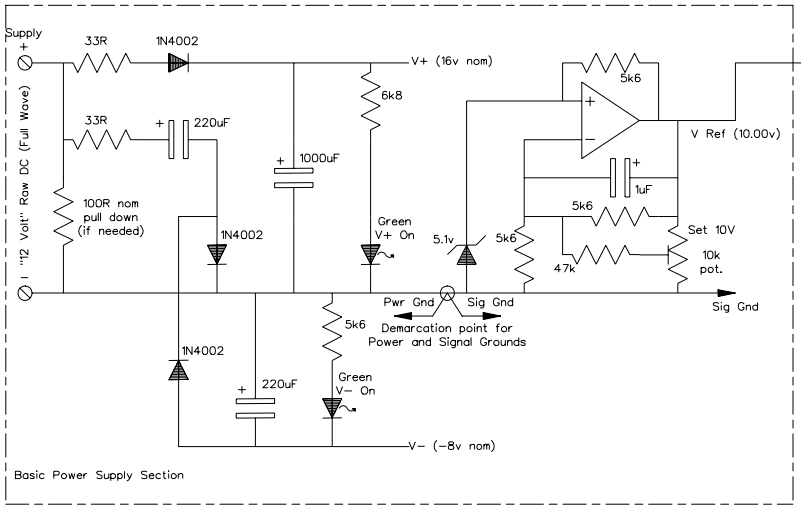

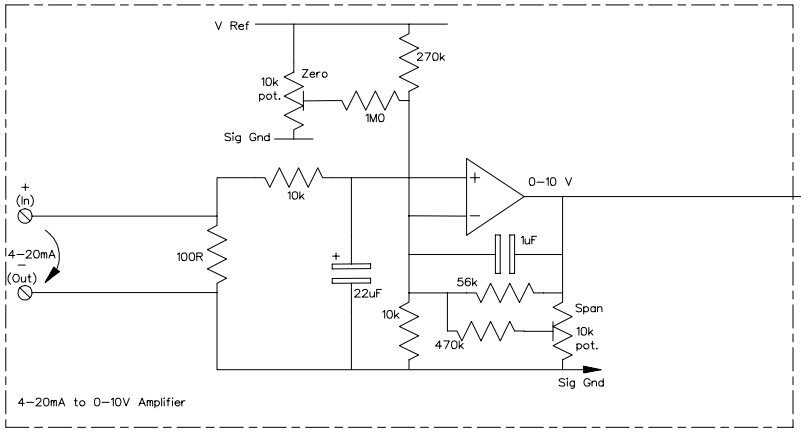

(Unused amplifiers:
connect output to − input
connect + input to sig gnd)

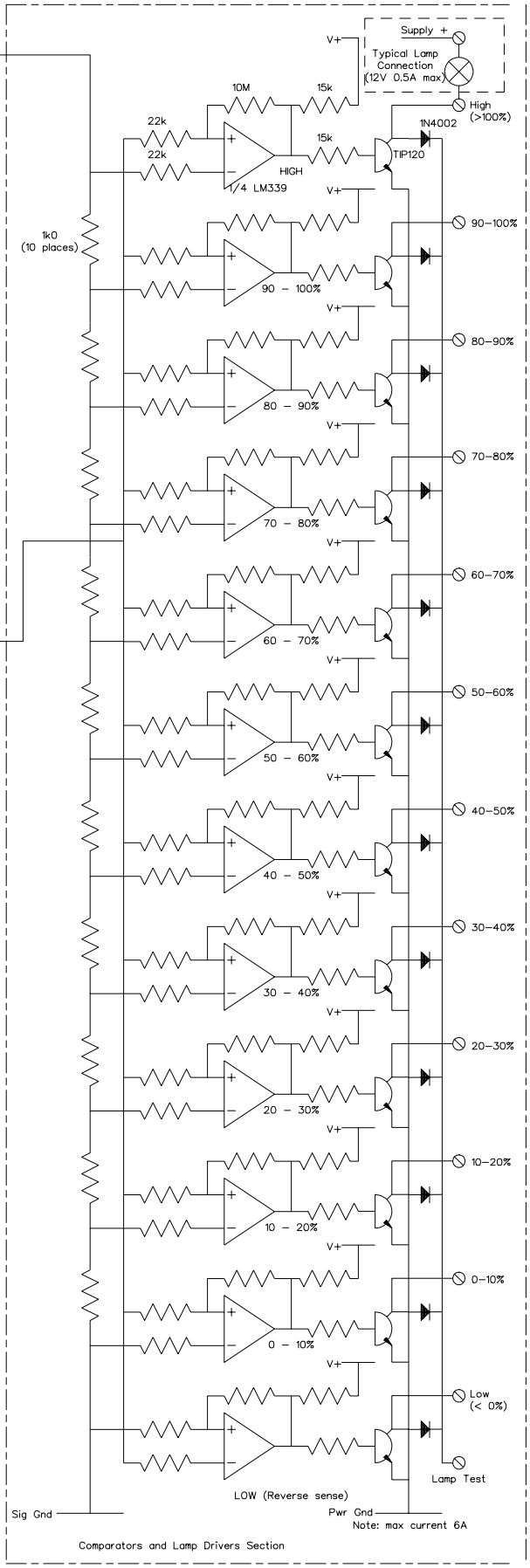

Wires Joined

Wires NOT Joined

ROBO SYSTEMS

1−800−221−ROBO

http://www.accucadd.com

4−20mA Quantizer

Drawn with Accucadd

Design (c) Copyright 2001 C R Williams